Basic Circuit Measurements and Ohm's Law

ECE 2100 Circuit Analysis Laboratory
updated 20 January 2016

Equipment and Supplies

DC Voltage Source, 0 to 15V
AC Voltage Source, 0 to 120V(RMS)
(2) Digital Multimeters (DMMs)
(1) 1kΩ ¼W resistor
(6) ¼W resistors
(1) Low Wattage (15W) Incandescent Light Bulb
(1) High Wattage (100W) Incandescent Light Bulb
(1) Light Bulb Base
Banana-to-Banana Plug Cables

Pre-Laboratory Assignment

1. Read and study the ECE 2100 Laboratory: Safety and Rules document and the ECE 2100 Laboratory: Notebook Requirements document (available on-line). There will be a quiz on this material at the beginning of lab.

2. Read this laboratory.

Procedures

1. Select six random resistors from the "grab bag" in front of the lab. Determine the *nominal*, *maximum* and *minimum* resistance values of each resistor using the color band code.

   Using a digital multimeter (DMM), measure and record the resistance of each resistor. Complete the following table.

number	nominal	maximum	minimum	measured
1				
2				
3				
4				
5				
6				

Notes:

a. After measuring resistance, never leave a multimeter function switch in the OHMs position. **Always return the multimeter to a voltage measurement mode**.

b. Be sure to have your instructor review your results and initial your lab notebook before continuing.

2. Calculate the maximum allowable voltage (in Volts) and current (in mA) for a 1.0 kΩ, ¼ W resistor.

3. **Be sure the DC power supply is OFF and set to 0V.** Use a 1.0 kΩ, ¼ W resistor, along with two DMMs, to construct the circuit shown below. Note that voltage is ACROSS the resistor and current is THROUGH the resistor.

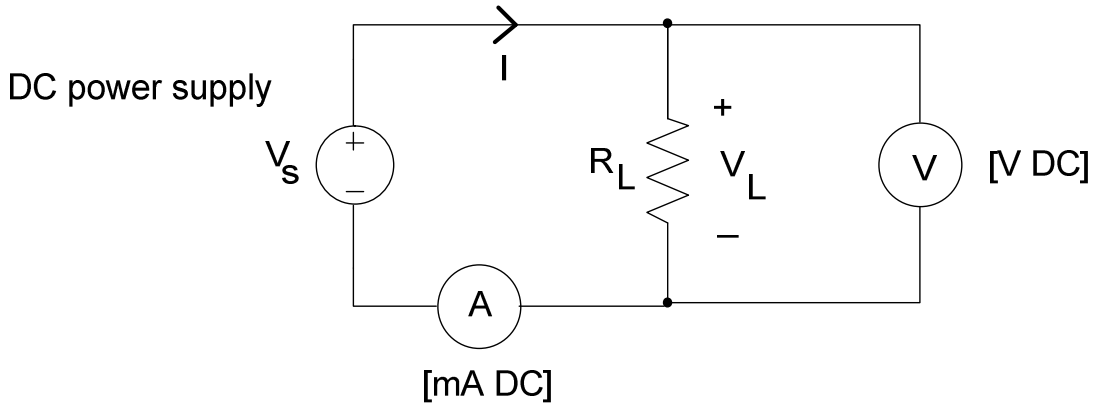

4. Being careful to **never exceed the maximum allowable voltage, turn on the DC power supply**, and measure and record at least 10 different voltage and current values as illustrated in the table below. Be sure to record the units associated with every measurement. **Turn off the DC power supply and set to 0V when done.**

V_S (units)	V_L (units)	I (units)
0		
1.5		
3		
.		
.		
.		

5. Calculate the maximum allowable current (in mA) for a 120 VAC, _____ W low-wattage incandescent light bulb. Also, measure and record the "cold" resistance of such a bulb.

6. **Be sure the VARIAC (VARIable AC power supply) source on the bench panel is OFF and set to 0V before proceeding. Be extra careful when using the VARIAC; do not work on or reach across a powered circuit. DO NOT APPLY POWER UNTIL YOUR INSTRUCTOR HAS INSPECTED YOUR CIRCUIT.** Construct the circuit below using the low-wattage incandescent bulb of step 5 as instructed by your laboratory instructor. Use the VARIAC as the voltage source and the light bulb as the resistive load (note correspondence between this circuit and the circuit of step 3). As before, set up one DMM to measure the voltage *across* the bulb and another to measure the current *through* the bulb **before turning on the VARIAC**. Note the change from DC to AC measurements in the DMM!

   Once your instructor has inspected the circuit, you will be given a set of voltage values to use for the source. Tabulate as in step 4.

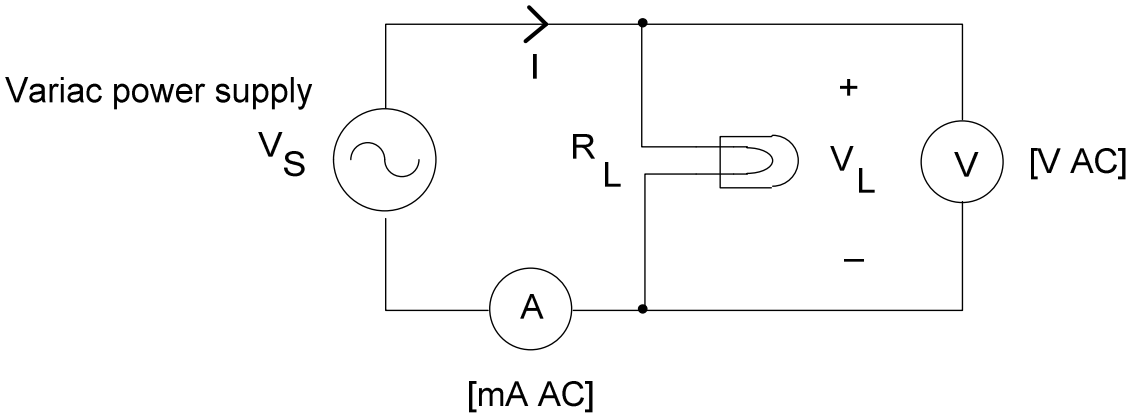

Note: The VARIAC is an AC power supply that can provide a variable 60 Hz sinusoidal AC voltage up to 10 A. We will not often use this supply this semester, but it is important for future ECE work since the US electrical grid is based on a 60 Hz frequency.

7. Repeat steps 5 and 6 using a high-wattage incandescent light bulb rated at 120 VAC, _____ W provided by your instructor.

Analysis

Begin by reviewing the guidelines for keeping your lab notebook. Perform this analysis work in your lab notebook.

1. Which of the resistors of Step 1 (if any) are out of tolerance?

2. Graph the current vs. voltage (I-V) data from laboratory procedure steps 4, 5, and 6 for the resistor and the two light bulbs (the vertical axis is the current axis). Plot all three curves on the same set of axes, perhaps using different scales for each curve. Compare the shapes of the three plots. Are they different? Why or why not?

3. Calculate the power delivered to the resistor of laboratory procedure step 4 by the DC source using the voltmeter and ammeter readings. Plot this power vs. the resistor voltage.

4. Use the graph from analysis step 2 above to determine the resistance and conductance at 50%, 75%, and 100% of the maximum voltage for the resistor. Briefly comment on the results.

5. Use the graph from analysis step 2 above to determine the resistance at 50%, 75%, and 100% of the rated voltage for each light bulb. Briefly comment on the results.

Credits and Copyright

Adapted from material developed by current and former ECE faculty, including Professors Joseph Kelemen and Frank Severance, and input from ECE laboratory instructors.

© 2016 Damon A. Miller. All rights reserved.