Series and Parallel Circuits

ECE 2100 Circuit Analysis Laboratory
updated 16 May 2011

Pre-Laboratory Assignment

1. Consider the following series circuit. Derive a formula to calculate voltages V_1, V_2, V_3 and V_4 in terms of R_1, R_2, R_3, R_4, and V_S.

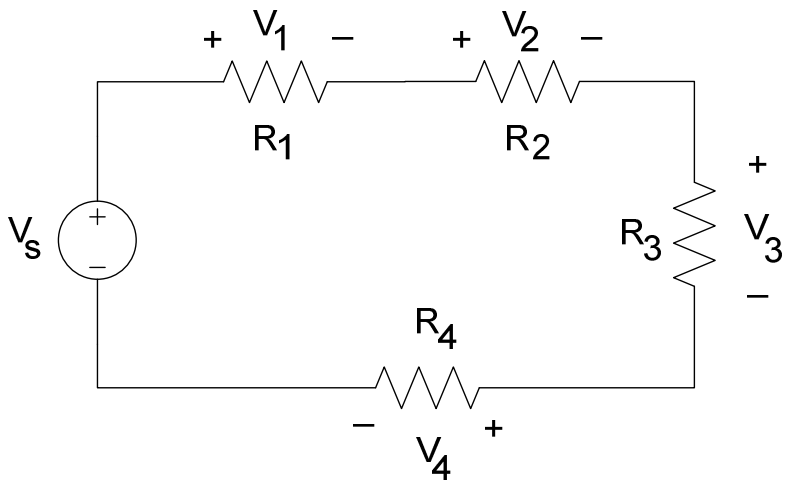

Figure 1. Series Circuit with Four Resistors

2. For the following circuit, derive a formula for R_2 in terms of R_1, V_2, and V_S.

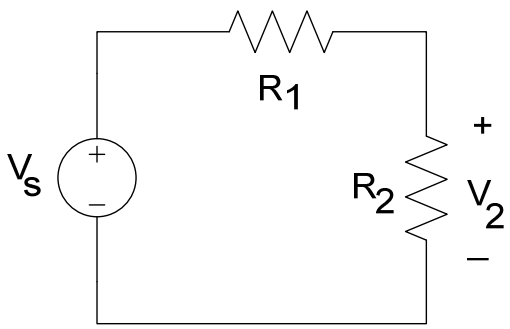

Figure 2. Series Circuit with Two Resistors

3. Consider the following combination series/parallel circuit. Note that each of the nodes is numbered 0 (reference node or "ground"), 1, or 2.

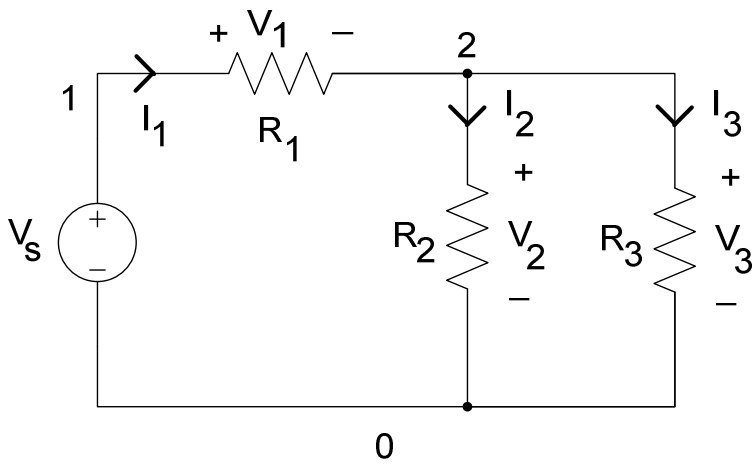

Figure 3. Combination Series/Parallel Circuit

a. Derive a formula for the total resistance R_T "seen by" V_S in terms of R_1, R_2, and R_3.

b. Derive a formula for the current I_1 in terms of R_1, R_2, R_3, and V_S.

c. Use the *current divider rule* to find a formula for I_2 in terms of I_1, R_2, and R_3.

d. Use the *current divider rule* to find a formula for I_3 in terms of I_1, R_2, and R_3.

Procedures

Part One

1. Consider the following resistor values for the circuit of Figure 1:

R_1	1000Ω (1kΩ)
R_2	2200Ω (2.2kΩ)
R_3	2700Ω (2.7kΩ)
R_4	4700Ω (4.7kΩ)

Table 1. Resistor Values for Part One

Complete a table with the nominal (column Nominal R) and actual (column Measured R) resistor values. Using the formulas derived in your pre-lab and the measured resistances (column Measured R), calculate the predicted voltages (column Calculated V) assuming a source voltage of V_S=5V.

2. Using the resistor values provided in Table 1, construct the circuit shown in Figure 1. Have your instructor check your work before energizing the circuit.

3. Energize your circuit and measure the voltages across each resistor. Record your findings, along with the voltages computed in step 1 (column Calculated V) in a table formatted as indicated. Compute the error percentage between the computed and experimental voltages.

	Nominal R	Measured R	Calculated V (using measured resistances)	Measured V	V % Error
R_1,V_1					
R_2,V_2					
R_3,V_3					
R_4,V_4					

Part Two

4. Select a nominal 4.7kΩ resistor as R_1. Carefully measure the value of this resistance. Select a second resistor from the resistor "grab bag" as R_2. Using resistors R_1 and R_2, assemble the circuit of Figure 2.

5. Measure the voltage V_2 across resistor R_2. From this, along with the equation derived in the pre-lab, calculate the theoretical resistance R_2. How do the theoretical and actual values compare?

Part 3

6. Measure the values of three resistors with nominal values as indicated in Table 2.

R_1	2.2kΩ
R_2	2.7kΩ
R_3	4.7kΩ

Table 2. Resistor Values for Part 3

7. Using the resistor values of Table 2 assemble the circuit of Figure 3 without the voltage source. Measure and record the total resistance R_T "seen by" V_S. Compare to the value of R_T computed for the actual resistor values using the equation derived in the pre-lab.

8. Now connect a V_S=5V voltage source (initially OFF of course).

9. Calculate the currents I_1, I_2 and I_3 using your equation from the pre-lab. Tabulate your

results.

10. After your instructor checks your circuit, energize the circuit with V_S=5V. Now measure the voltage drops across and currents through each resistor with polarities as indicated in Figure 3. Tabulate and calculate the current percent errors.

	Resistance R		Calculated I		Measured V		% Error Current
	Nominal	Measured	Calculated (using measured resistances)	Measured	Calculated (using measured resistances)	Measured	
R_1							
R_2							
R_3							

Part 4

11. A symbol for a *rheostat* or *variable resistor* is shown below.

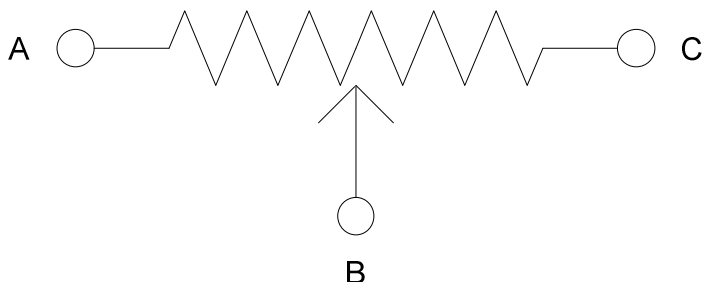

A rheostat works by varying the position of the "wiper" connected to terminal B. This position is often moved by turning a shaft. Notice that as the wiper position changes, the resistance from A to B and from B to C also changes, while the resistance from A to C remains the same. The resistances R_{AB} and R_{BC} can vary from 0 to R_{AC} and are related by the equation

$$\frac{R_{AB}}{R_{AC}} + \frac{R_{BC}}{R_{AC}} = 1.$$

12. Obtain a rotating arm rheostat. Observe and measure the resistance between the terminals A-C and B-C as the shaft is rotated.

13. Assemble the following circuit assuming a resistance ratio of 50%. Measure and record the voltages across A-C and B-C. Be sure to indicate the assumed polarity of measured voltages in your lab notebook.

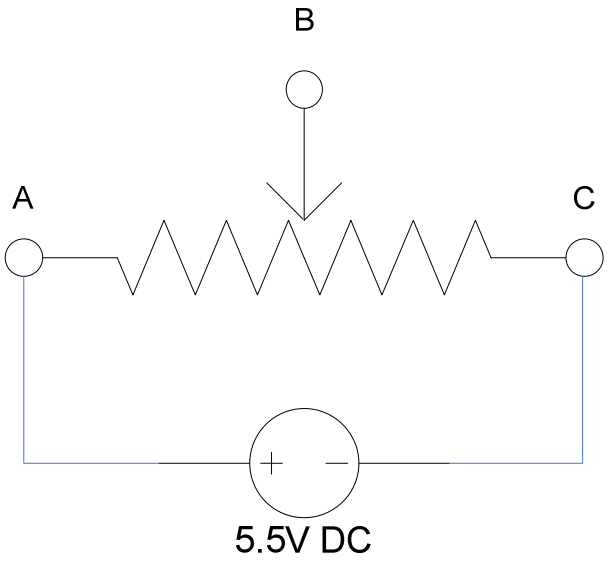

14. Set the wiper to make the voltage drop across terminals B-C of the rheostat to be 1.5 V (label your assumed voltage polarity). Calculate what resistance between terminals B-C is required to obtain the 1.5V drop. Verify your answer by disassembling your circuit and measuring the resistance directly.

Analysis

Begin by reviewing the guidelines for keeping your lab notebook. Perform this analysis work in your lab notebook.

1. Be sure to calculate and comment on all percent errors computed in this lab (in appropriate sections of your notebook).

2. Does the data of **Part 1** satisfy Kirchhoff's voltage law? Explain.

3. Does the data of **Part 3** satisfy Kirchhoff's current law? Explain

4. Show from the data of **Part 4** that the rheostat functions as a voltage divider.

Credits and Copyright

Adapted from material developed by current and former ECE faculty, including Professor Joseph Kelemen.

© 2011 Damon A. Miller and Frank L. Severance. All rights reserved.